REVISIONS					
MF	ZONE	LTR	DESCRIPTION	DATE	APPROV

NOTES:

1. MAKE FROM PART NO. 7791067, ALTER AS SHOWN.
2. FINGERPIECE ONLY – NICKEL PLATE .0005 TO .0016 THICK. ZINCATE DIP AND COPPER STRIKE AS PREPLATING TREATMENT RECOMMENDED.
3. MIL-W-13855 APPLIES.

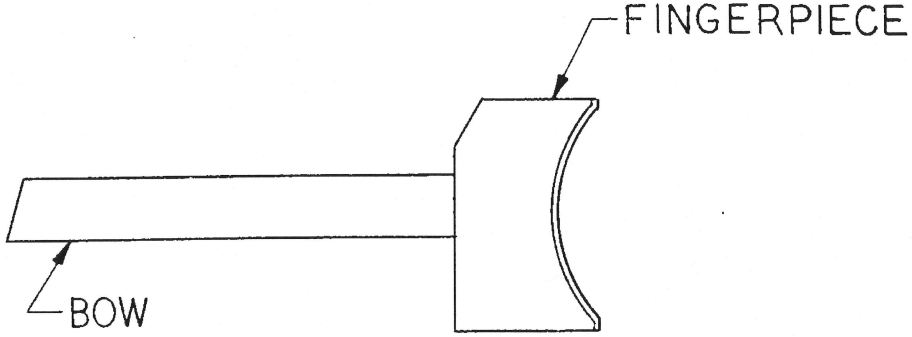

ALTERED ITEM DRAWING

PART NO. 12006346

MECHANICAL PROPERTIES	
YS MIN	
YS MAX	
EL 2	
RA	
BH	
RH	

BI2006345	PISTOL, M15
NEXT ASSY	USED ON
APPLICATION	

UNLESS OTHERWISE SPECIFIED DIMENSIONS ARE IN INCHES
TOLERANCES:
ANGLES ± —
3 PLACE DECIMALS ± —
2 PLACE DECIMALS ± —

MATERIAL —

FINAL PROTECTIVE FINISH
SEE NOTE 2

CONTRACT NO.
DATE 8 MAY 73
PREP K
CHK R. W. DeLeeuw
ENGR E. Winter
SUBMITTED E. Winter
APPROVED R. S. Henry

DEPT OF THE ARMY
U.S. ARMY WEAPONS COMMAND
ROCK ISLAND, ILLINOIS, 61201

TRIGGER

SIZE	CODE IDENT NO.	DRAWING NO.
B	19204	12006346

SCALE 2/1 SHEET 1 OF

EDITION OF 29 JUL 69 MAY BE USED

NOTES:
1. MIL-W-13855 APPLIES.

REVISIONS					
MF	ZONE	LTR	DESCRIPTION	DATE	APPROVED

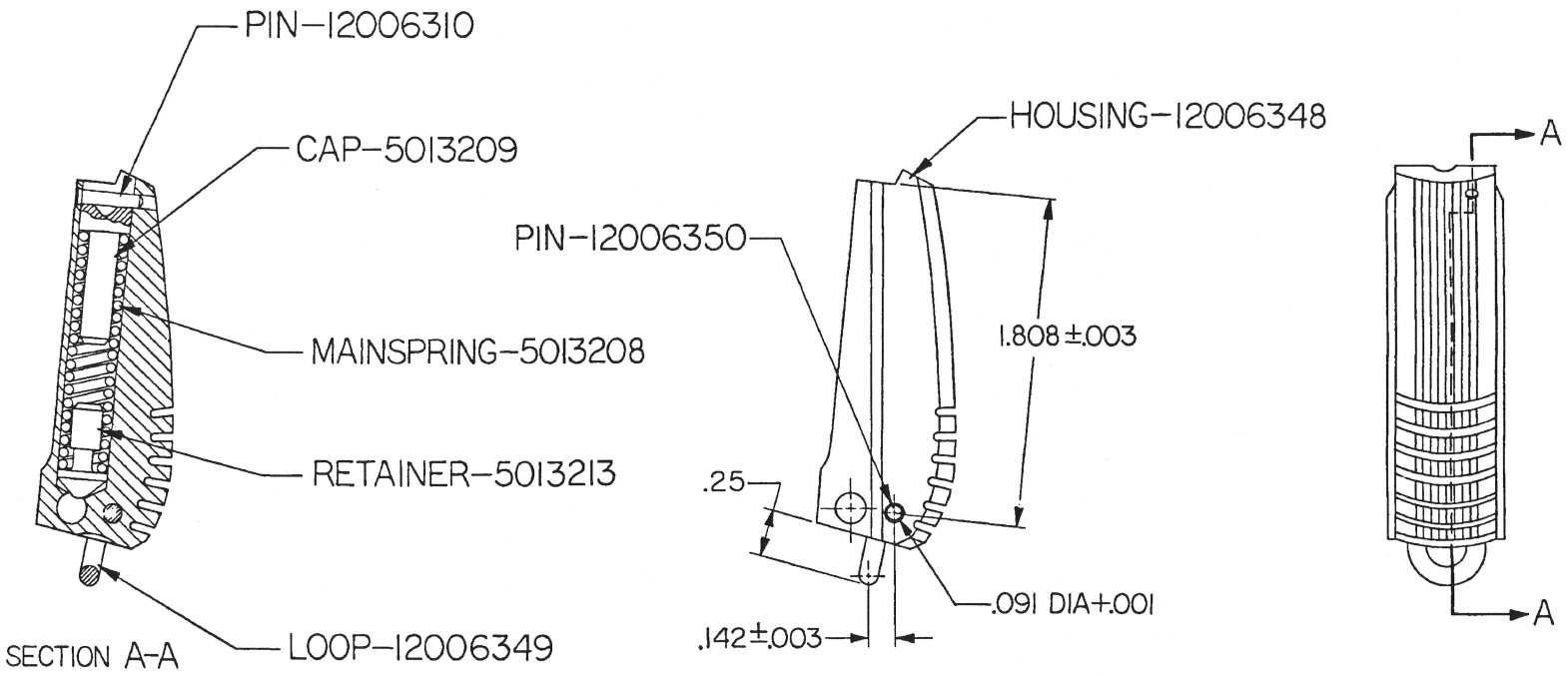

SEE PL-12006347

PART NO. 12006347

MECHANICAL PROPERTIES			
YS MIN			
YS MAX			
EL 2			
RA			
BH			
RH			

NEXT ASSY	USED ON
F12006306	PISTOL, M15

APPLICATION

UNLESS OTHERWISE SPECIFIED DIMENSIONS ARE IN INCHES
TOLERANCES:
ANGLES ± —
3 PLACE DECIMALS ± —
2 PLACE DECIMALS ±.01

MATERIAL

FINAL PROTECTIVE FINISH

CONTRACT NO:

DATE 23 MAY 73

PREPARED R.L. Bassig
CHECKED R.W. Ardrmal
ENGINEER E. Winter
SUBMITTED A. A. Cole
APPROVED R. S. Henry

DEPT OF THE ARMY
U.S. ARMY WEAPONS COMMAND
ROCK ISLAND, ILLINOIS, 61201

HOUSING,
MAINSPRING ASSEMBLY

SIZE	CODE IDENT NO.	DRAWING NO.
C	19204	12006347

SCALE 2/1 SHEET 1 OF 1

C12006347

REVISIONS					
MF	ZONE	LTR	DESCRIPTION	DATE	APPROVED

NOTES:

1. MAKE FROM PART NO. 5503841, ALTER AS SHOWN.
2. ABRASIVE BLAST HOUSING ALL OVER USING 80 GRIT MATERIAL PRIOR TO APPLICATION OF PROTECTIVE FINISH.
3. FINISH 3.3.1 OF MIL-STD-171.
4. MIL-W-13855 APPLIES.

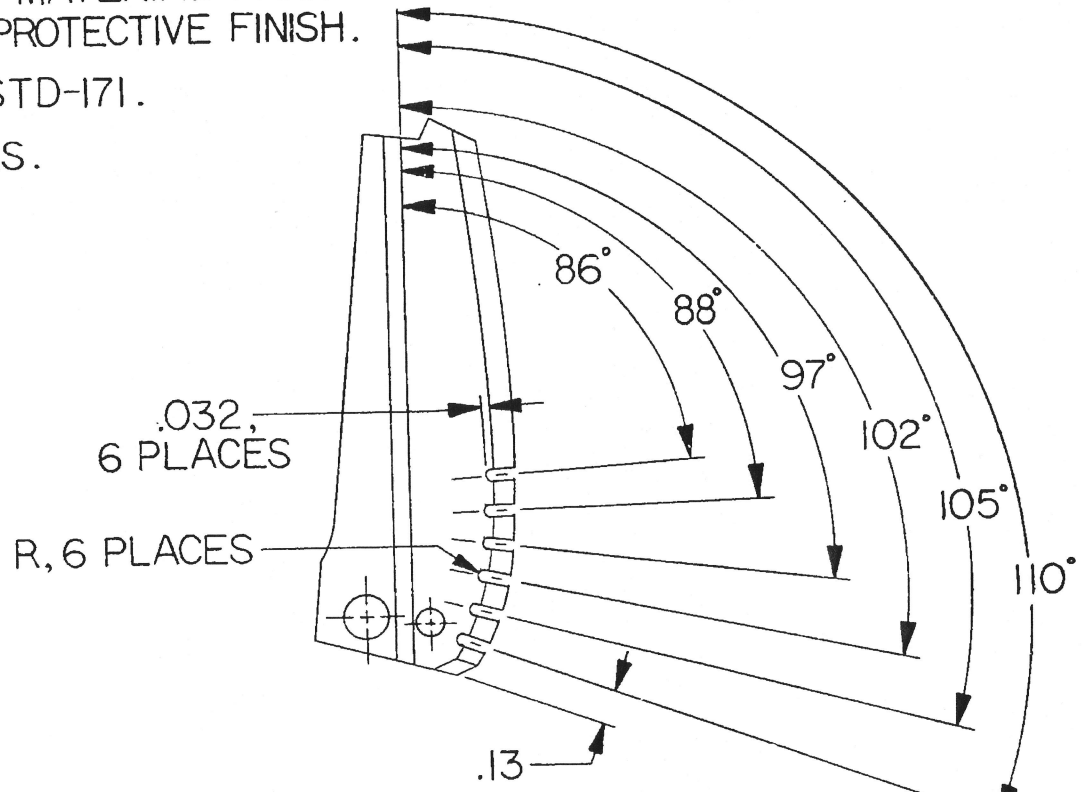

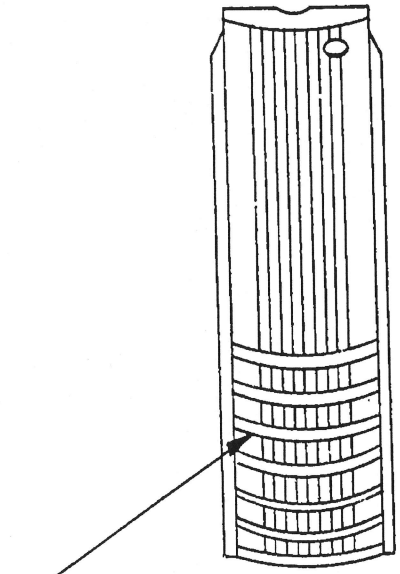

ALTERED ITEM DRAWING

PART NO. 12006348

MECHANICAL PROPERTIES			
YS MIN			
YS MAX			
EL 2			
RA		C12006347	PISTOL, M15
BH		NEXT ASSY	USED ON
RH		APPLICATION	

UNLESS OTHERWISE SPECIFIED DIMENSIONS ARE IN INCHES
TOLERANCES:
ANGLES ± 2°
3 PLACE DECIMALS ± .020
2 PLACE DECIMALS ± .05

MATERIAL

FINAL PROTECTIVE FINISH
SEE NOTE 3

CONTRACT NO:
DATE 23 MAY 73
PREP R.L. Passig
CHK R.W. [illegible]
ENGR E. Winter
SUBMITTED A. A. Cole
APPROVED R. S. Henry

DEPT OF THE ARMY
U.S. ARMY WEAPONS COMMAND
ROCK ISLAND, ILLINOIS, 61201

HOUSING, MAINSPRING

SIZE	CODE IDENT NO.	DRAWING NO.
B	19204	12006348

SCALE 2/1 SHEET 1 OF 1

EDITION OF 28 JUL 68 MAY BE USED

A 12006349

MECHANICAL PROPERTIES	
YS MIN	
YS MAX	
EL 2	
RA	
BH	
RH	

APPLICATION	
NEXT ASSY	USED ON
C120063 47	PISTOL, M15

REVISIONS			
LTR	DESCRIPTION	DATE	APPROVED

NOTES:

1. MAKE FROM PART NO. 5013214, ALTER IN ACCORDANCE WITH FOLLOWING NOTES.
2. ABRASIVE BLAST USING 80 GRIT MATERIAL PRIOR TO APPLICATION OF PROTECTIVE FINISH.
3. FINISH 3.3.1 OF MIL-STD-171.
4. MIL-W-13855 APPLIES.

ALTERED ITEM DRAWING

PART NO. 12006349

UNLESS OTHERWISE SPECIFIED DIMENSIONS ARE IN INCHES
TOLERANCES:
ANGLES ± —
3 PLACE DECIMALS ± —
2 PLACE DECIMALS ± —

MATERIAL

FINAL PROTECTIVE FINISH
SEE NOTE 3

CONTRACT NO:

DATE 23 MAY 73

PREP
CHK
ENGR

SUBMITTED

APPROVED

DEPT OF THE ARMY
U.S. ARMY WEAPONS COMMAND
ROCK ISLAND, ILLINOIS, 61201

LOOP-LANYARD

SIZE	CODE IDENT NO.	DRAWING NO.
A	19204	12006349

SCALE NONE | SHEET | OF |

AMSWE Form 403A. 29 Jul 69

A 12006350

MECHANICAL PROPERTIES		APPLICATION	
		NEXT ASSY	USED ON
YS MIN		C12006347	PISTOL,
YS MAX			M15
EL 2			
RA			
BH			
RH			

REVISIONS			
LTR	DESCRIPTION	DATE	APPROVED

NOTES:

1. MAKE FROM PART NO. 5013215. ALTER IN ACCORDANCE WITH FOLLOWING NOTES.
2. POLISH BOTH ENDS $\surd^{16}$ PRIOR TO APPLICATION OF PROTECTIVE FINISH.
3. FINISH 3.3.1 OF MIL-STD-171.
4. MIL-W-13855 APPLIES.

ALTERED ITEM DRAWING

PART NO. 12006350

UNLESS OTHERWISE SPECIFIED DIMENSIONS ARE IN INCHES
TOLERANCES:
ANGLES ± ___
3 PLACE DECIMALS ± ___
2 PLACE DECIMALS ± ___

MATERIAL

FINAL PROTECTIVE FINISH
SEE NOTE 3

CONTRACT NO:

DATE 23 MAY 73

PREP
CHK
ENGR
SUBMITTED
APPROVED

DEPT OF THE ARMY
U.S. ARMY WEAPONS COMMAND
ROCK ISLAND, ILLINOIS, 61201

PIN-LANYARD LOOP

SIZE	CODE IDENT NO.	DRAWING NO.
A	19204	12006350

SCALE NONE | SHEET | OF

AMSWE Form 403A, 29 Jul 69

NOTES:

1. MIL-W-13855 APPLIES.

REVISIONS					
MF	ZONE	LTR	DESCRIPTION	DATE	APPROVED

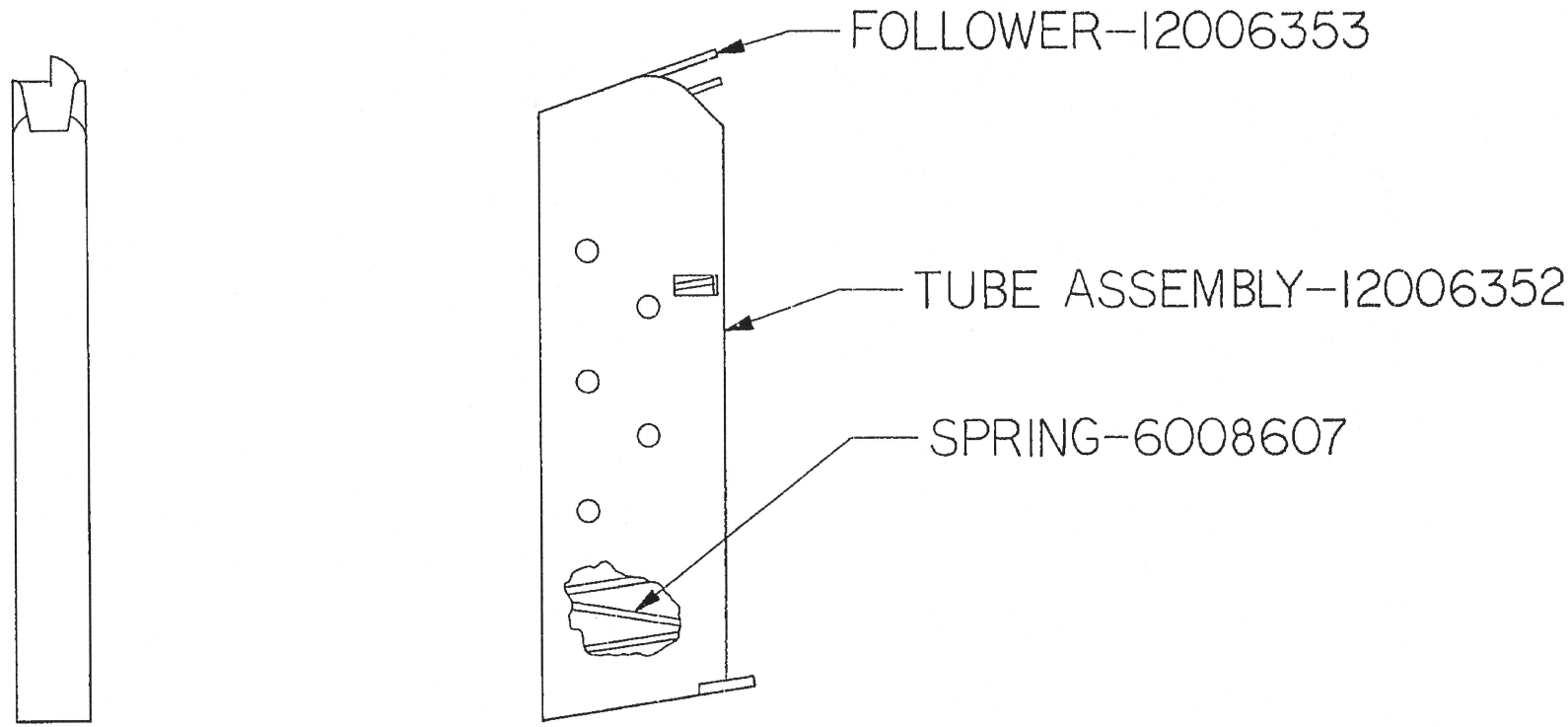

SEE PL-12006351

PART NO. 12006351

MECHANICAL PROPERTIES	
YS MIN	
YS MAX	
EL 2	
RA	
BH	
RH	

NEXT ASSY	USED ON
F12006306	PISTOL, M15

APPLICATION

UNLESS OTHERWISE SPECIFIED DIMENSIONS ARE IN INCHES
TOLERANCES:
ANGLES ± —
3 PLACE DECIMALS ± —
2 PLACE DECIMALS ± —

MATERIAL

FINAL PROTECTIVE FINISH

CONTRACT NO

DATE 23 MAY 73

PREP R. L. Passig

CHK R. W. [illegible]

ENGR E. A. Winter

SUBMITTED A. A. Cole

APPROVED R. S. [illegible]

DEPT OF THE ARMY
U.S. ARMY WEAPONS COMMAND
ROCK ISLAND, ILLINOIS, 61201

MAGAZINE ASSEMBLY

SIZE	CODE IDENT NO.	DRAWING NO.
B	19204	12006351

SCALE 1/1 SHEET 1 OF 1

EDITION OF 29 JUL 69 MAY BE USED

REVISIONS					
MF	ZONE	LTR	DESCRIPTION	DATE	APPRO

NOTES:

1. POLISHED SURFACES TO BE 16/ FINISH PRIOR TO APPLICATION OF PROTECTIVE FINISH.
2. FINISH 3.3.1 OF MIL-STD-171.
3. MAKE FROM PART NO. 6147114 OR 7265559, ALTER AS SHOWN.
4. MIL-W-13855 APPLIES.

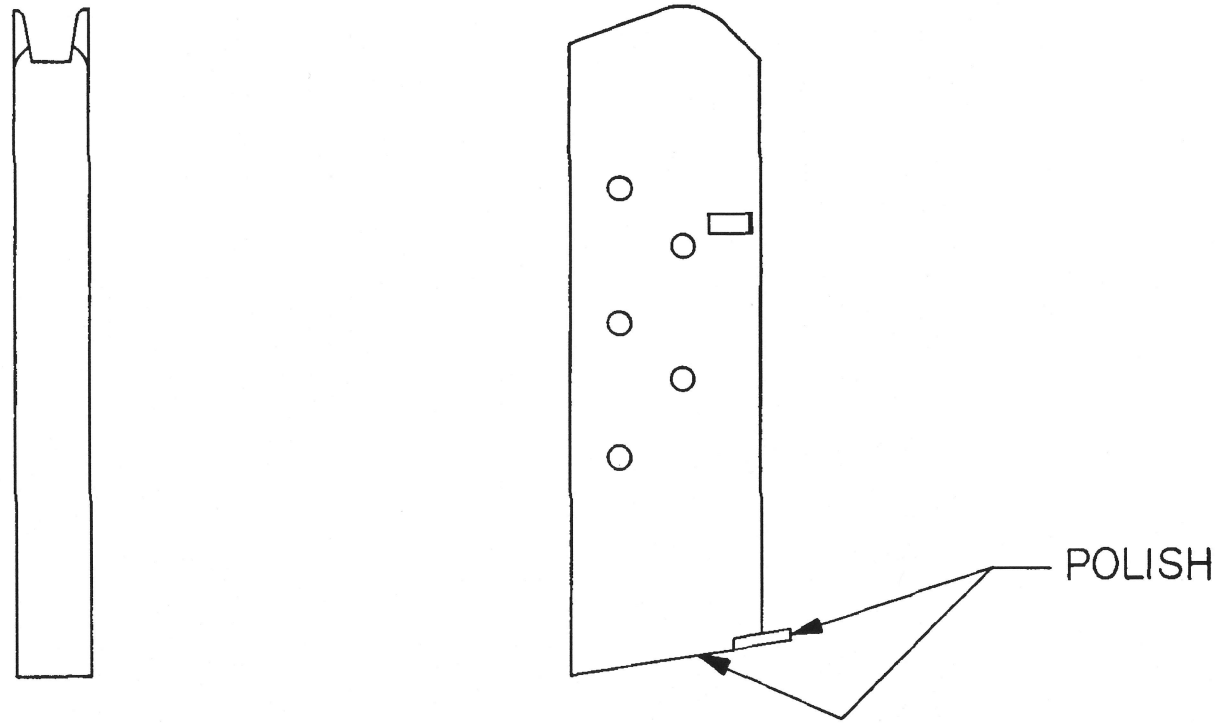

ALTERED ITEM DRAWING

PART NO. 12006352

MECHANICAL PROPERTIES	
YS MIN	
YS MAX	
EL 2	
RA	
BH	
RH	

NEXT ASSY	USED ON
B12006351	PISTOL, M15

APPLICATION

UNLESS OTHERWISE SPECIFIED DIMENSIONS ARE IN INCHES
TOLERANCES:
ANGLES ± —
3 PLACE DECIMALS ± —
2 PLACE DECIMALS ± —

MATERIAL

FINAL PROTECTIVE FINISH
SEE NOTE 2

CONTRACT NO:
DATE 23 MAY 73
PREP R.L. Passig
CHK [illegible]
ENGR E. Winter
SUBMITTED A. A. Cole
APPROVED R. S. Henry

DEPT OF THE ARMY
U.S. ARMY WEAPONS COMMAND
ROCK ISLAND, ILLINOIS, 61201

TUBE ASSEMBLY, MAGAZINE

SIZE	CODE IDENT NO.	DRAWING NO.
B	19204	12006352

SCALE 1/1 SHEET 1 OF 1

AMSWE Form 402B 12 Nov 70 EDITION OF 29 JUL 69 MAY BE USED

NOTES:

1. POLISHED SURFACE TO BE 16√ PRIOR TO APPLICATION OF PROTECTIVE FINISH.
2. MAKE FROM PART NO. 6008608, ALTER AS SHOWN.
3. FINISH 3.3.1 OF MIL-STD-171.
4. MIL-W-13855 APPLIES.

REVISIONS					
MF	ZONE	LTR	DESCRIPTION	DATE	APPRO

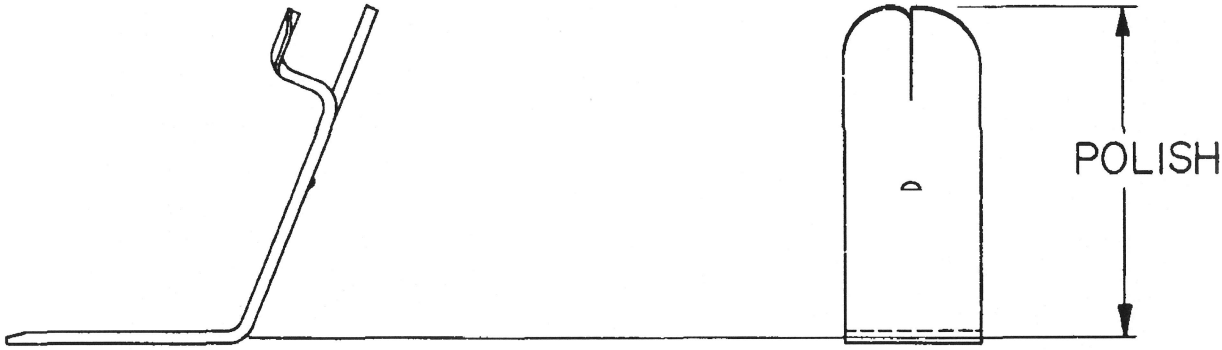

ALTERED ITEM DRAWING

PART NO. 12006353

MECHANICAL PROPERTIES				UNLESS OTHERWISE SPECIFIED DIMENSIONS ARE IN INCHES TOLERANCES: ANGLES ± — 3 PLACE DECIMALS ± — 2 PLACE DECIMALS ± —	CONTRACT NO: DATE 23 MAY 73	DEPT OF THE ARMY U.S. ARMY WEAPONS COMMAND ROCK ISLAND, ILLINOIS, 61201
YS MIN					PREP R L Pacing	FOLLOWER, MAGAZIN
YS MAX				MATERIAL	CHK [signature]	
EL 2					ENGR E. Winter	
RA		B12006351	PISTOL, M15		SUBMITTED A. A. Cole	SIZE B · CODE IDENT NO. 19204 · DRAWING NO. 12006353
BH		NEXT ASSY	USED ON	FINAL PROTECTIVE FINISH SEE NOTE 3	APPROVED R. S. Henry	
RH		APPLICATION				SCALE 2/1 · SHEET 1 OF

AMSWE Form 403B 12 Nov 70 EDITION OF 29 JUL 69 MAY BE USED